PIANO SEMINTERRATO

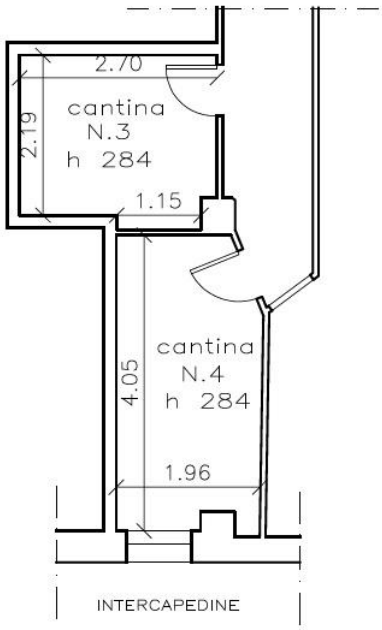
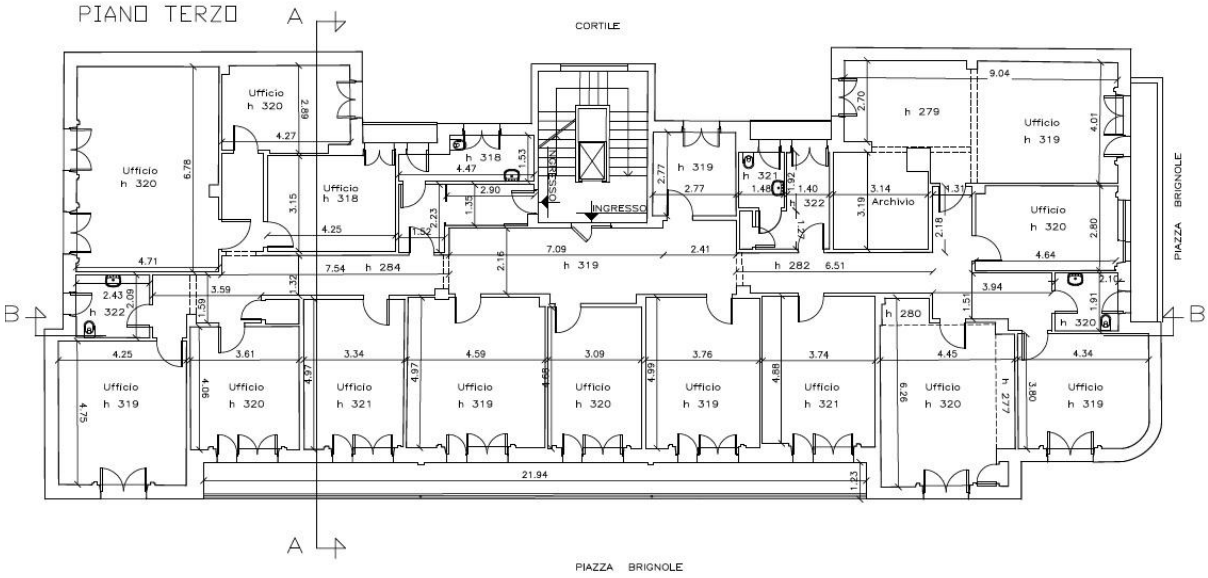
PIANO TERZO